Series ESK / ESB

Sandwich construction 20 mm, 40 mm and 80 mm
Thermal conductivity k: 1,2 W/m²K at ESK-20 : 0,75 W/m²K at ESK-40 : 0,35 W/m²K at ESK-80

- Self-supporting, frameless construction built with separate components, torsion resistant, corrosion and seawater resistant
- Variable design in width, depth and height according to a grating measurement
- Enlargement possible, interchangable single components, assembly on site possible
- Outstanding thermal insulation through the double shelled sandwich construction
- Gelcoat surface for extreme life span, colour RAL 7035
- 1-leaf doors (protective system IP 65), 2-leaf doors (protective system IP 54) with precise functioning closures possible
- Door frame with sturdy hinges, both made of stainless steel, door opening angle 180°
- Doors with 3-point latching and handle (closure no. 0513), panic function, half profile cylinder
- Threaded inserts M10 made of stainless steel inside all wall components
- Rigid base frame construction made of stainless steel, height 80/100 mm, designed for high load capacities
- Traversable roof components, self-supporting up to 4100 mm; designed for snowload of 75 kg/m² an manload of 100 kg/m² excess length of roof 50 mm all around
- Different floor designs as extra equipment

Manufacturing Program:

ESK-20 pages 5.01 up to 5.03

Wall thickness 20 mm
cabinet height h: 2140 mm (wall component 2020 mm)
2540 mm (wall component 2420 mm)
2940 mm (wall component 2820 mm)
base frame 80 mm, traversable floor
cabinet width/depth: standardized measures 500/1000 mm

Door components:
960 mm (inside diameter 880 x 1940 mm, 1 leaf)
960 mm (inside diameter 880 x 2100 mm, 1 leaf)
1460 mm (inside diameter 1380 x 1940 mm, 2 leafs)
1960 mm (inside diameter 1880 x 1940 mm, 2 leafs)

ESK-40 pages 5.04 up to 5.05

Wall thickness 40 mm
cabinet height h: 2240 mm (wall component 2100 mm)
2740 mm (wall component 2600 mm)
3240 mm (wall component 3100 mm)
4240 mm (wall component 4100 mm)
base frame 100 mm, traversable floor
cabinet width/depth: standardized measures 1000 mm

Door components:
960 mm (inside diameter 880 x 2100 mm, 1- leaf)

ESK-80 pages 5.06 up to 5.08

Wall thickness 80 mm
cabinet height h: 2600 mm (wall component 2420 mm)
3000 mm (wall component 2820 mm)
floor/frame 100 mm, traversable
cabinet width/depth: standardized measures 500/1000 mm

Door components:
1019 mm (inside diameter 939 x 2043 mm, 1 leaf)

ESB page 5.09

Cabinets in modular design made of aluminium and stainless steel

Sandwich construction, wall thickness 40 mm,
thermal conductivity k = 1.2 W/m²K

Order Example:

Cabinet model ESK-20 2540-3000-1500

ESK = series, 20 = wall thickness (mm), 2540 = height over all (mm, floor traversable), 3000 = width (mm), 1500 = depth (mm); doors and extra equipment according to separate specification

Extra Equipment ESK:

- Other dimensions and designs on request
- Other RAL colour tone
- Reduced electrical surface resistance in accordance with EN 60079-0 (<10^9 Ω), necessary in ex-proof Zone 1
- Profile-rubber sealed observation window made of laminated safety glass or acrylic glass in the door or wall components
- Double-pane equipped window
- Other closure variations (see „Accessories“)
- Door stop by pressurized spring (see „Accessories“)
- Door closer
- Electrical heating in normal and ex-proof design (see „Heating systems“)
- Cabinet ventilation systems (see „Accessories“)
- Mounting plate, sheet steel 2,5 mm, galvanized (see „Accessories“)
- Assembly rack, C-formed steel, galvanized (see „Accessories“)
- Lighting sets
- Air conditioning units
- Ventilators
- Holes with or without covering; single layer areas
- Lifting eye bolts (see „Accessories“)
- Lifting and fixing brackets made of stainless steel at base frame (see „Accessories“)
- Other designs for base frame and floor
- Longer excess length of roof
- Components corresponding to fire resistance F30 or B1-DIN 4102
- Sluiceways and porches on request
- Integrated gas bottle cabinets on request
- Installation of customer´s equipment on request and delivery

Construction subject to change without notice – Dimensions in mm

ESK-20

Sandwich component construction, thermal conductivity k = 1.20 W/m^{2}K
Other technical data and extra equipment: page 5.00
and following pages

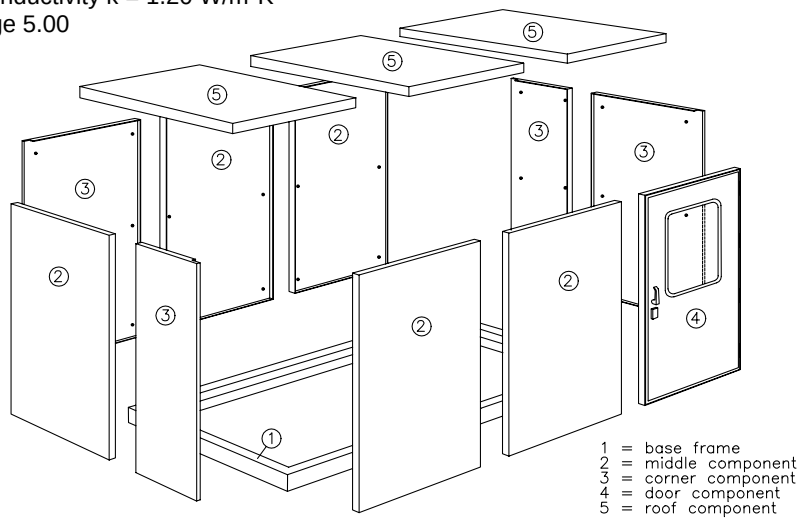

Principle of Construction

Floor, walls and roof are assembled with component parts. On this way single components are interchangable, easy to enlarge and assembly can be done on site.

Plan View

Cabinet width w and depth d:

Standardized measures 500 / 1000 mm
(Depth d self-supporting up to 4000 mm)

Door components:

DC 960:
internal width 880 mm, 1-leaf, IP 65

DC 1460:
internal width 1380 mm, 2-leaf, IP 54

DC 1960:
internal width 1880 mm, 2-leaf, IP 54
Door hinges attached to right or left side possible (standard: right side);

Door components can be assembled at variable locations on plan view.

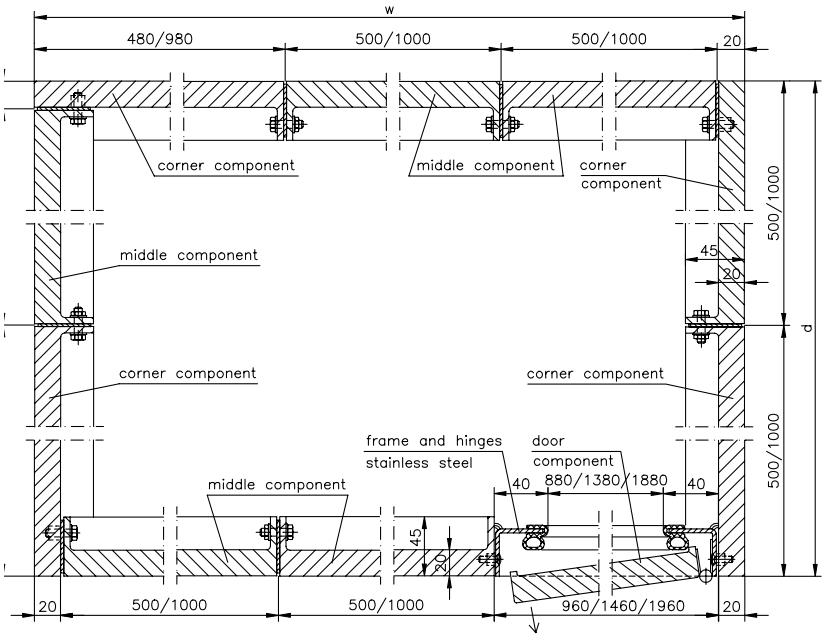

Vertical Section

Cabinet height h:

floor traversable/open.... 2140 mm
floor traversable/open.... 2540 mm
floor traversable/open.... 2940 mm

Door components:

Internal height = 1940 mm for h = 2140
Internal height = 2100 mm for h=2540 and 2940

When heights h are 2540mm and 2940 mm an upper part is added to the top of the door component

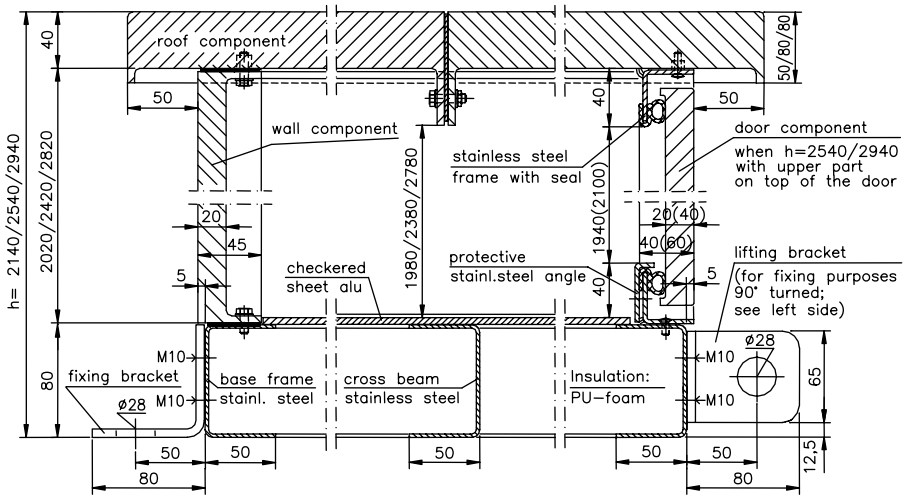

ESK-20

Floor and Base Frame

Designs: Floor traversable (example 1, 2 and 4)
Open floor (example 3 and 4)

Material: Base frame and cross beams stainless steel, thickness of material matches statical requirement.
Traversable floor made of checkered sheet aluminium.

Note: The floor cross beams are statically self-supporting up to 2500 mm. Appropriate longitudinal support (foundation, joist, etc.) must be designed by the customer.
Foundations or substructure of joists must be constructed by customer to suit statical requirement.

On request: Base frame and cross beams in other dimensions / other material requirements / other floor coverings / other floor constructions.

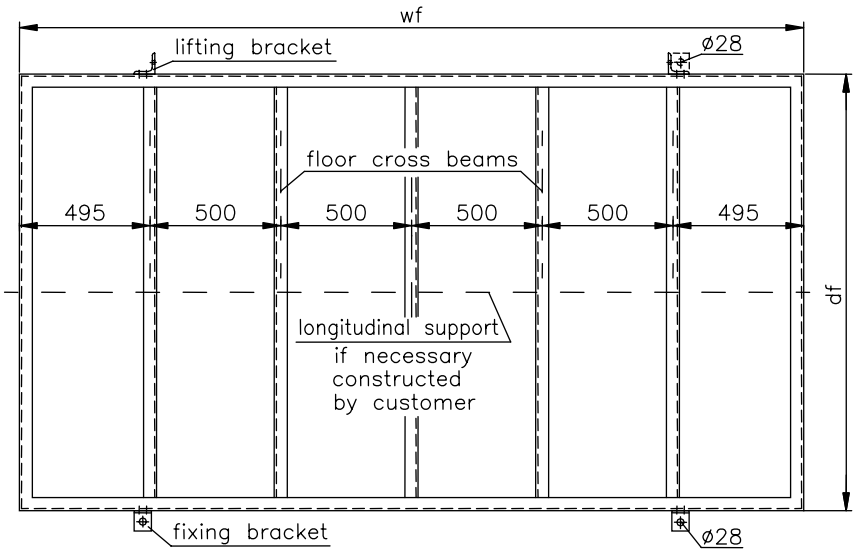

Base Frame Plan View

cabinet w/d	base frame wf/df
1500	1490
2000	1990
2500	2490
3000	2990
3500	3490
4000	3990
4500	4490
5000	4990
5500	5490
6000	5990

w = width of cabinet
d = depth of cabinet

When the lifting brackets are turned 90° they can be used as fixing brackets

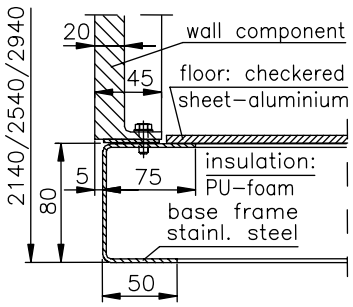

Example 1
Traversable floor, base frame with cross beams

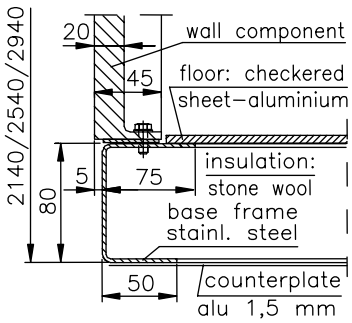

Example 2
Traversable floor, base frame with cross beams and alu–counterplate (extra equipment: stainless steel 1 mm)

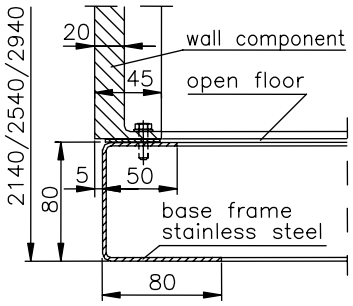

Example 3
Open floor, only base frame without cross beams

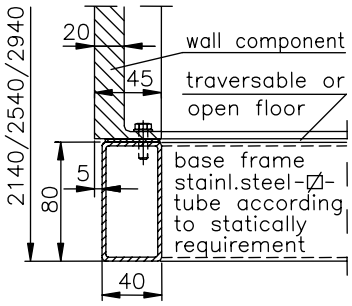

Example 4
as example 1–3, base frame made of rectangular tubing

ESK-20

Wall Components

Wall thickness:	20 mm
Standard heights:	2020 mm, 2420 mm and 2820 mm
Standard widths:	500 mm and 1000 mm (middle components and corner components B)
	480 mm and 980 mm (corner components A)
Threaded inserts:	M 10, stainless steel, pressed into the inside of the polyester wall components (standard arrangement: see drawing)
On request:	Special dimensions, special designs, other distances for inserts

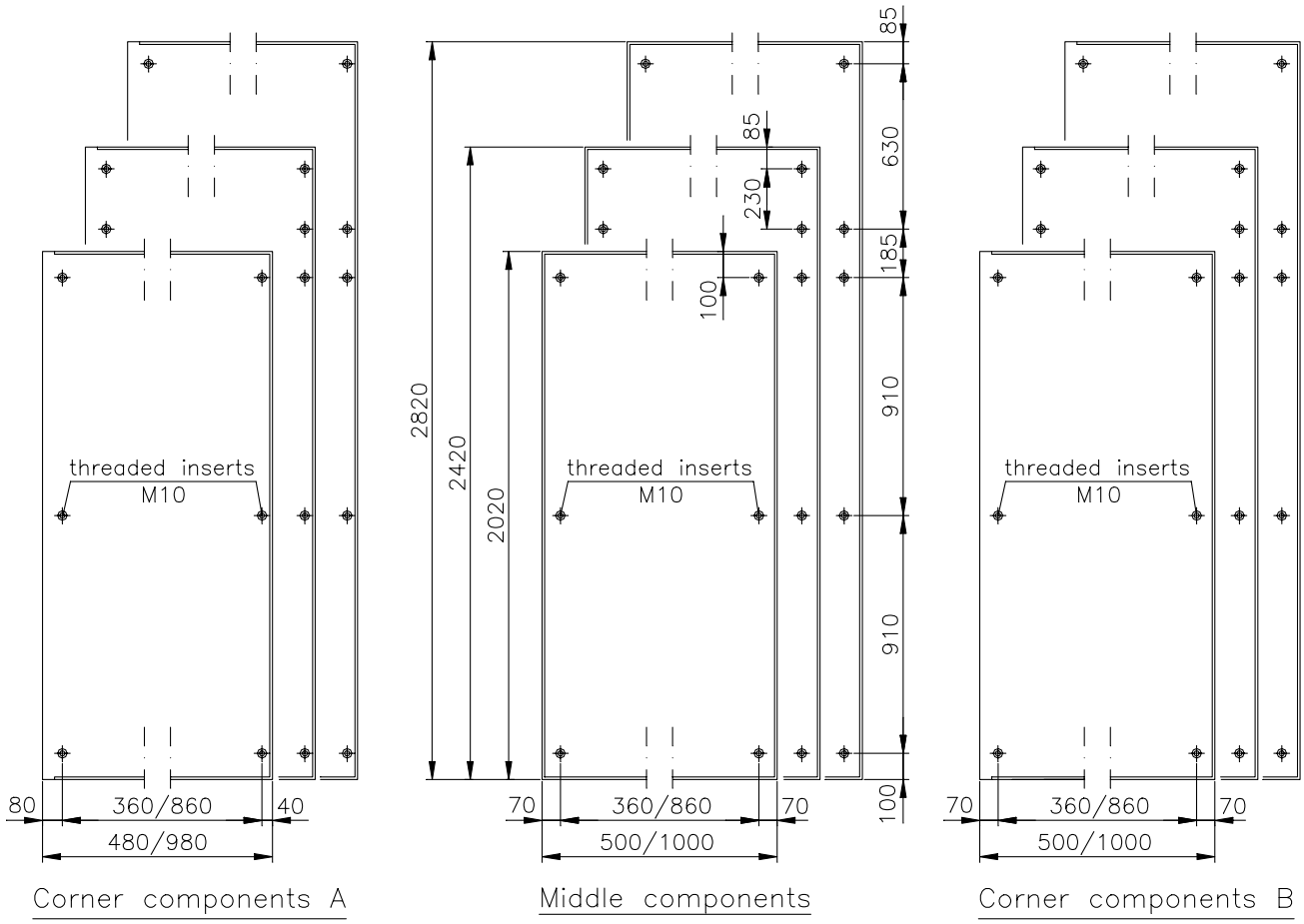

Wall Components
interior view

ESK-40

Sandwich component construction, thermal conductivity k = 0.75 W/m^{2}K
Other technical data and extra equipment: page 5.00
and following pages

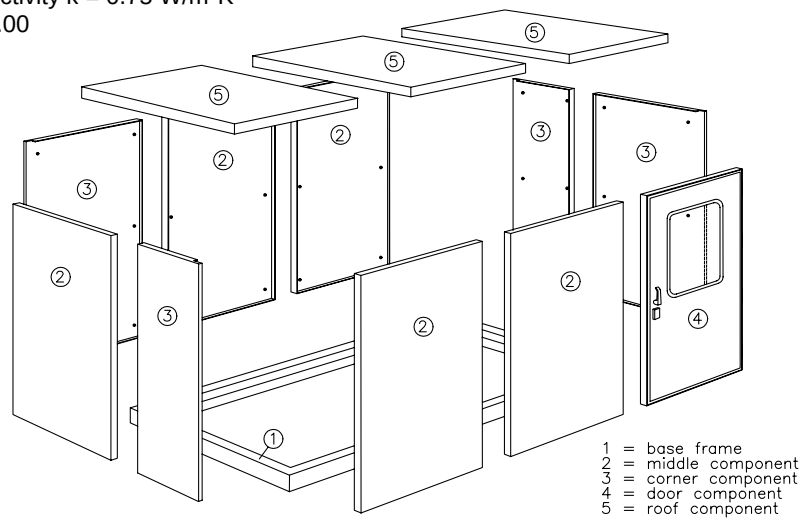

Principle of Construction

Floor, walls and roof are assembled with component parts. On this way single components are interchangable, easy to enlarge and assembly can be done on site.

Plan View

Cabinet width w and depth d:

Standardized measures 1000 mm
(Depth d self-supporting up to 4000 mm)

Door components:

DC 960:
Internal width 880 mm, 1-leaf, IP 65

Door hinges attached to right or left side possible (standard: right side);

Door components can be assembled at variable locations on plan view.

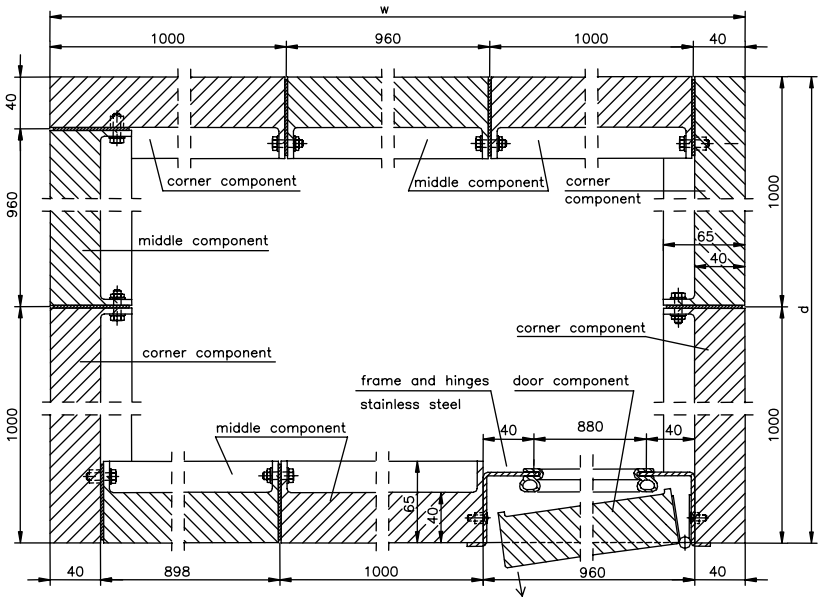

Vertical Section

Cabinet height h:

floor traversable / open …..2240 mm
floor traversable / open …..2740 mm
floor traversable / open …..3240 mm
floor traversable / open …..4240 mm

Door components:

Internal height = 2100 mm

When heights h are 2740mm , 3240 mm and 4240 mm an upper part is added to the top of the door component

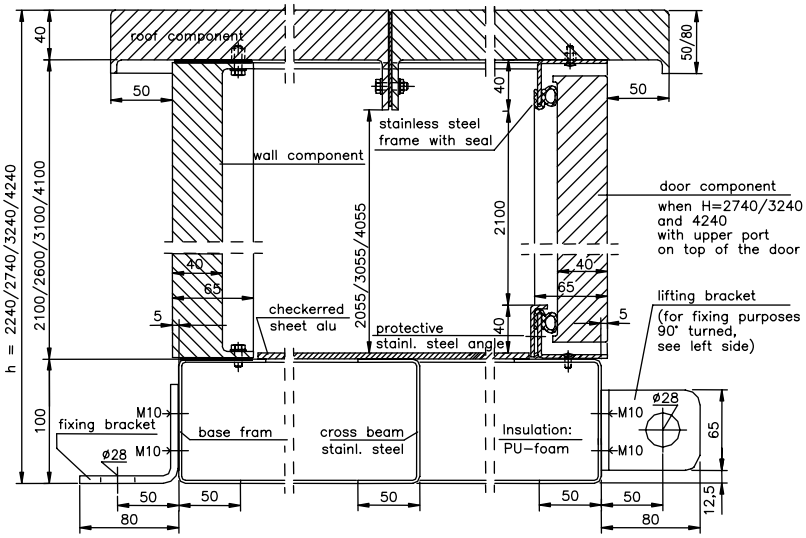

ESK-40

Floor and Base Frame

Designs: Floor traversable (example 1, 2 and 4)
Open floor (example 3 and 4)

Material: Base frame and cross beams stainless steel, thickness of material matches statical requirement.
Traversable floor made of checkered sheet aluminium.

Note: The floor cross beams are statically self-supporting up to 2500 mm. Appropriate longitudinal support (foundation, joist, etc.) must be designed by the customer.
Foundations or substructure of joists must be constructed by customer to suit statical requirement.

On request: Base frame and cross beams in other dimensions / other material requirements / other floor coverings / other floor constructions.

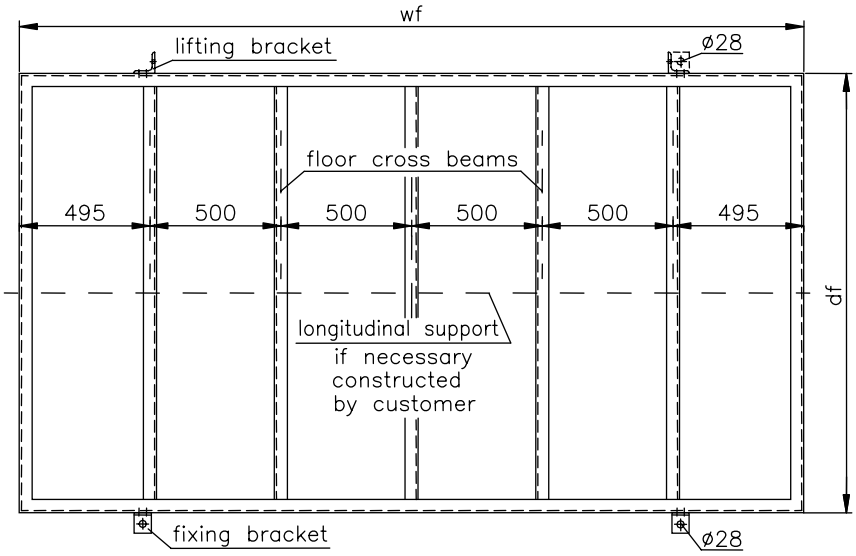

Base Frame Plan View

cabinet w/d	base frame wf/df
1500	1490
2000	1990
2500	2490
3000	2990
3500	3490
4000	3990
4500	4490
5000	4990
5500	5490
6000	5990

w = width of cabinet
d = depth of cabinet

When the lifting brackets are turned 90° they can be used as fixing brackets

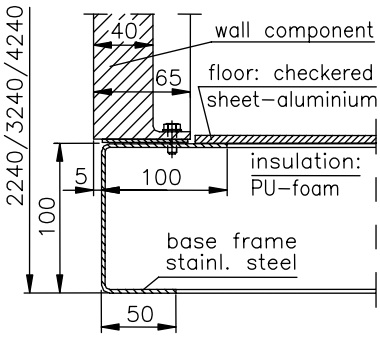

Example 1
Traversable floor, base frame with cross beams

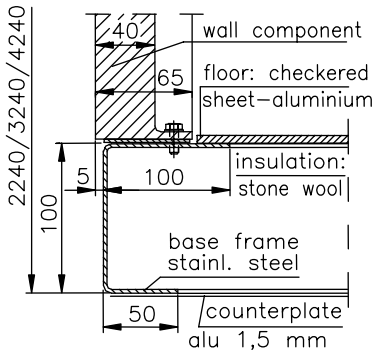

Example 2
Traversable floor, base frame with cross beams and alu–counterplate (extra equipment: stainless steel 1 mm)

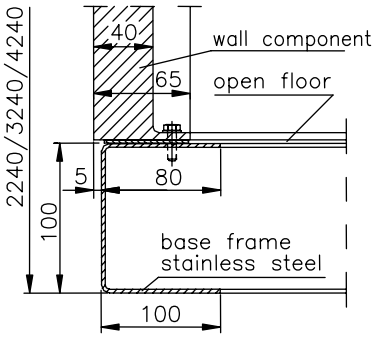

Example 3
Open floor, only base frame without cross beams

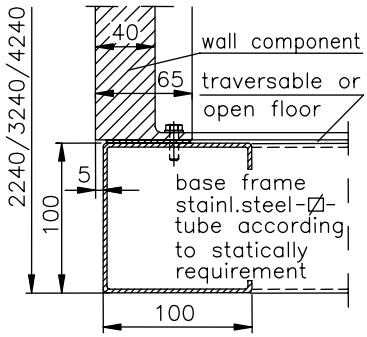

Example 4
as example 1–3, base frame made of rectangular tubing

ESK-80

Sandwich component construction, thermal conductivity k = 0,35 W/m^{2}K
Other technical data and extra equipment: page 5.00
and following pages

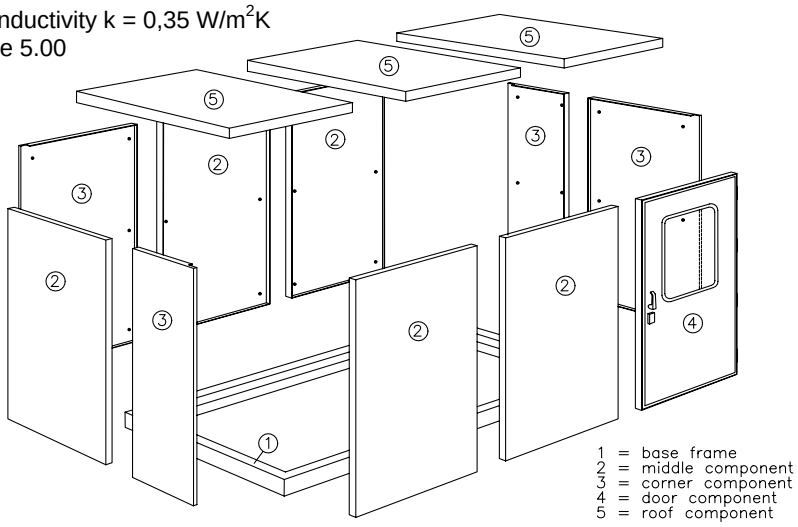

Principle of Construction

Floor, walls and roof are assembled with component parts. On this way single components are interchangable, easy to enlarge and assembly can be done on site.

Plan View

Cabinet width w and depth d:

Standardized measures 500 / 1000 mm
(Depth d self-supporting up to 3000 mm)

Door component:

DC 1019:
internal width 939 mm, 1-leaf, IP 65

Door hinges attached to right or left side possible (standard: right side);

Door components can be assembled at variable locations on plan view.

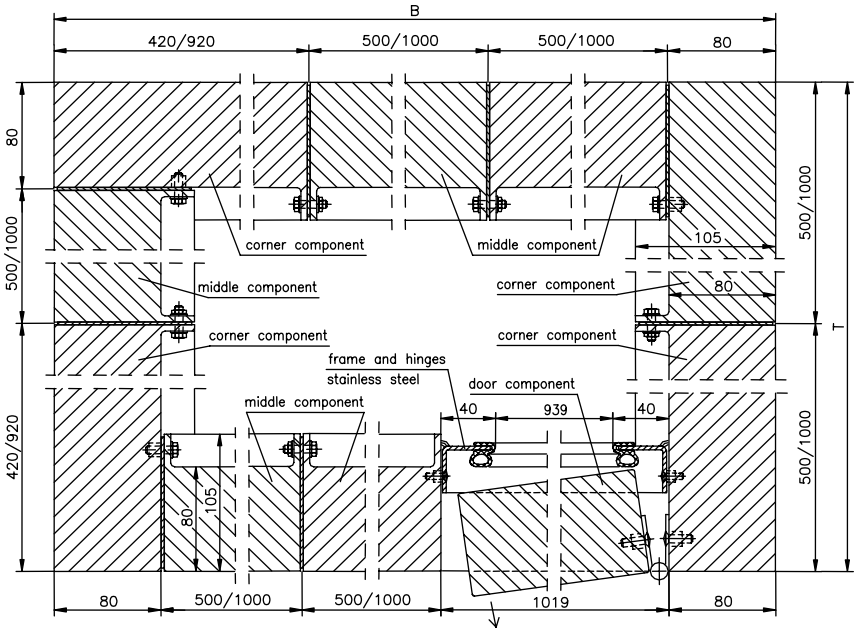

Vertical Section

Cabinet height h:

floor traversable/open.... 2600 mm
floor traversable/open.... 3000 mm

Door components:

Internal height = 2043 mm
An upper part can be added to the top of the door component (h =3000 mm)

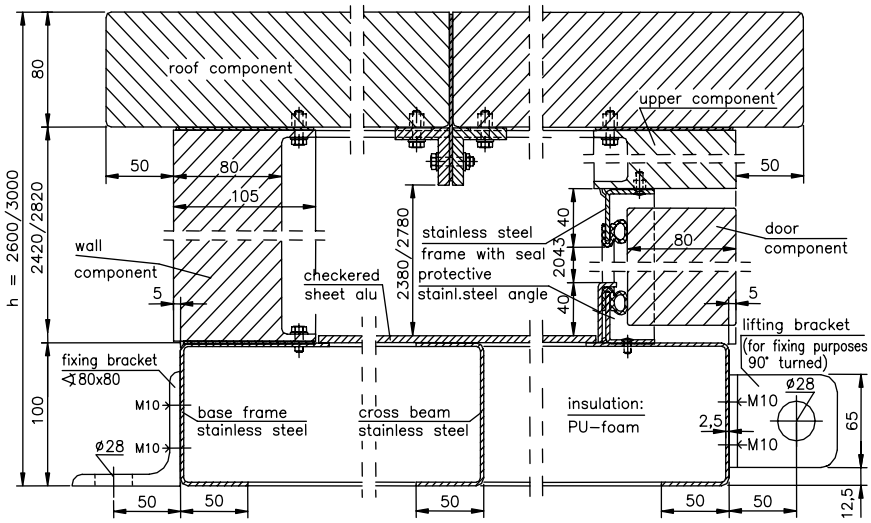

ESK-80

Floor and Base Frame

Designs: Floor traversable (examples 1, 2 and 4)
Open floor (examples 3 and 4)

Material: Base frame and cross beams stainless steel, thickness of material matches statical requirement.
Traversable floor made of checkered sheet aluminium.

Note: The floor cross beams are statically self-supporting up to 2500 mm. Appropriate longituditudinal support (foundation, joist, etc.) must be designed by the customer.
Foundations or substructure of joists must be constructed by customer to suit statical requirement.

On request: Base frame and cross beams in other dimensions / other material rquirements / other floor coverings / other floor constructions.

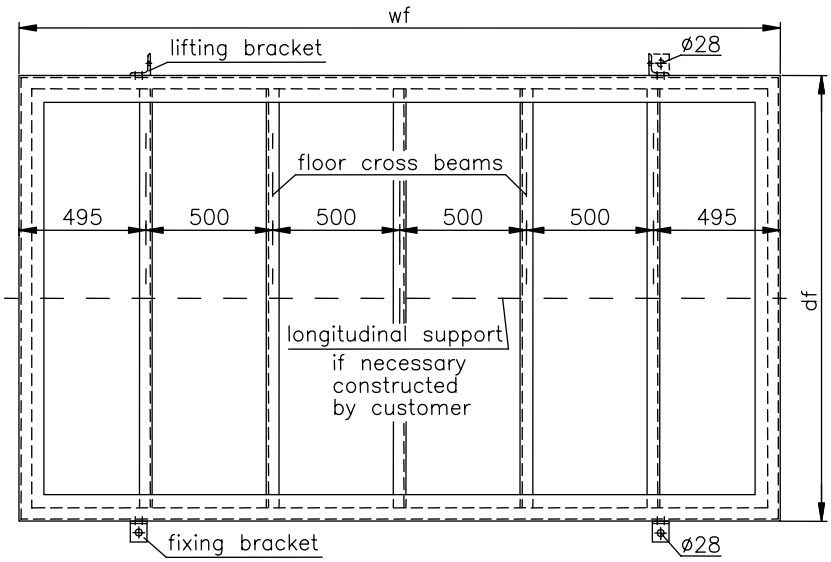

Base Frame Plan View

cabinet w/d	base frame wf/df
1500	1490
2000	1990
2500	2490
3000	2990
3500	3490
4000	3990
4500	4490
5000	4990
5500	5490
6000	5990

w = width of cabinet
d = depth of cabinet

When the lifting brackets are turned 90° they can be used as fixing brackets

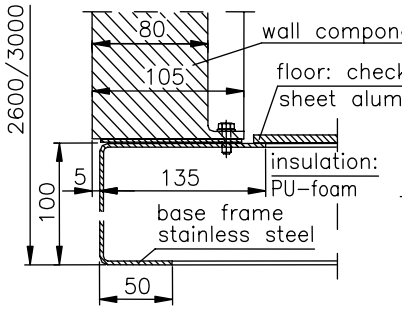

Example 1
Traversable floor, base frame with cross beams

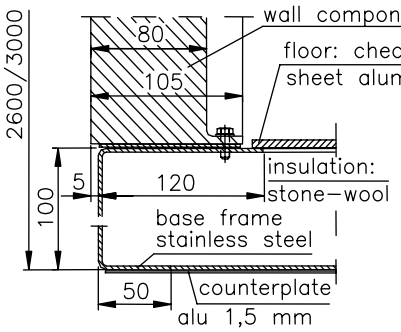

Example 2
Traversable floor, base frame with cross beams and alu-counterplate (extra equipment: stainless steel 1 mm)

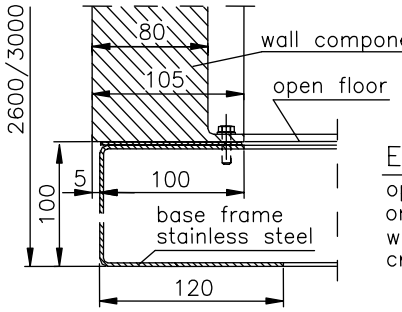

Example 3
open floor, only base frame without cross beams

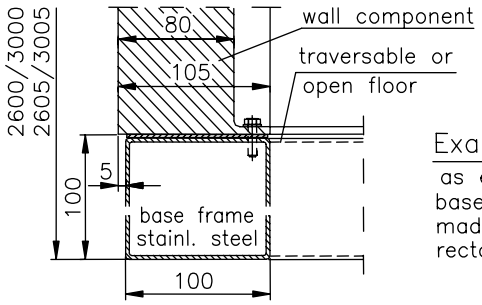

Example 4
as example 1–3, base frame made of rectangular tubing

ESK-80

Wall Components

Wall thickness: 80 mm

Standard heights: 2420 mm and 2820 mm

Standard widths: 500 mm and 1000 mm (middle components and corner components B)
420 mm and 920 mm (corner components A)

Threaded inserts: M 10, stainless steel, pressed into the inside of the polyester wall components (standard arrangement: see drawing)

On request: Special dimensions, special designs, other distances for inserts

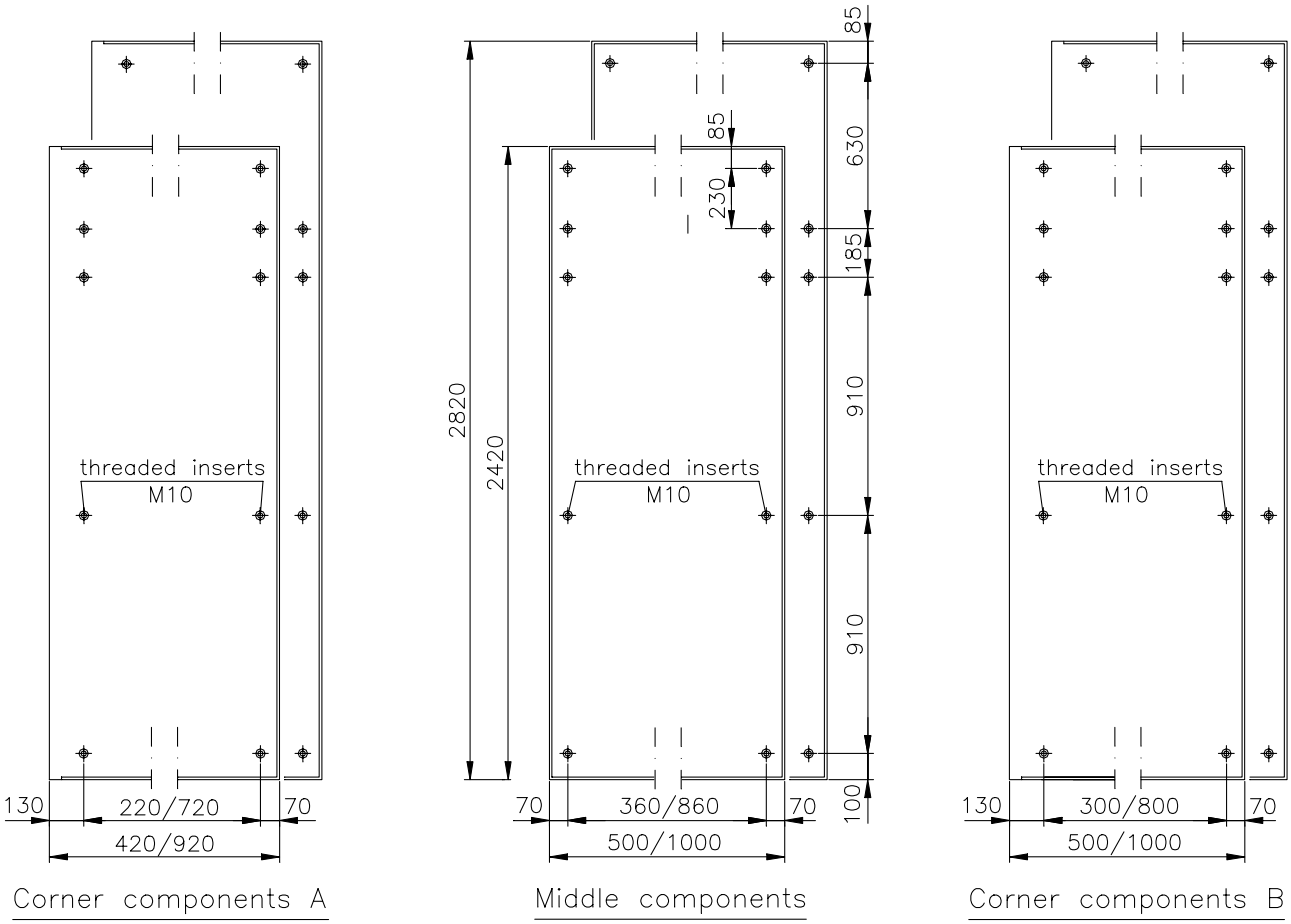

Wall Components
interior view

ESB

Sandwich component construction, thermal conductivity k = 1.20 W/m^{2}K
Other technical data and extra equipment on request

Principle of Construction

Floor, walls and roof are assembled with component parts. On this way single components are interchangable, easy to enlarge and assembly can be done on site.

Aluminium and stainless steel do not require surface treatment.

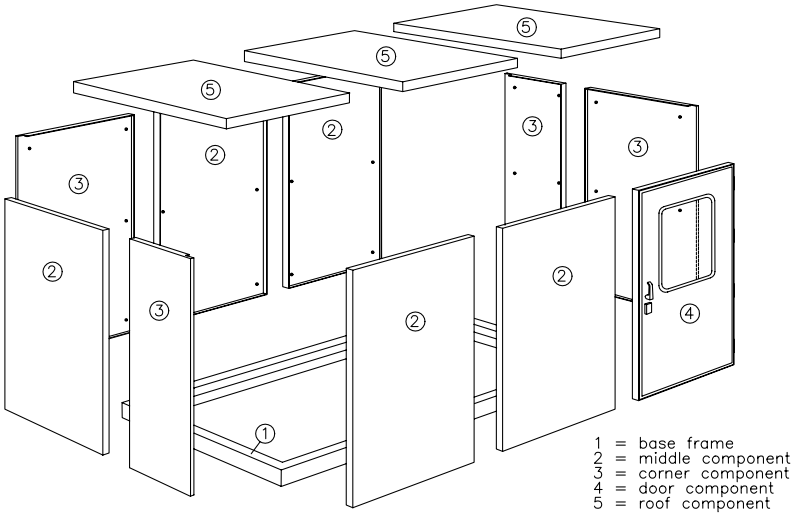

Construction

Material:

Sheet aluminium (outside 2 mm, inside 1,5 mm),
Stainless steel (outside 1,5 mm, inside 1 mm),
Insulation of mineral wool

Cabinet size:

Width w and depth d:
standardized measures 500 / 1000 mm
Height h:
2200 mm, 2510 mm, 3010 mm

Door components:

DC 1000: internal width 955 / 915 mm, 1-leaf, IP 65

DC 1500: internal width 1455/1415 mm, 2-leaf, IP 54

DC 2000: internal width 1955/1915 mm, 2-leaf, IP 54

Internal height: 2105 mm (1955 mm with h = 2200 mm). An upper plate compensates space above door component.

Door hinges attached to right or left side possible (standard: right side);

Door components can be assembled at variable locations on plan view.

On request:
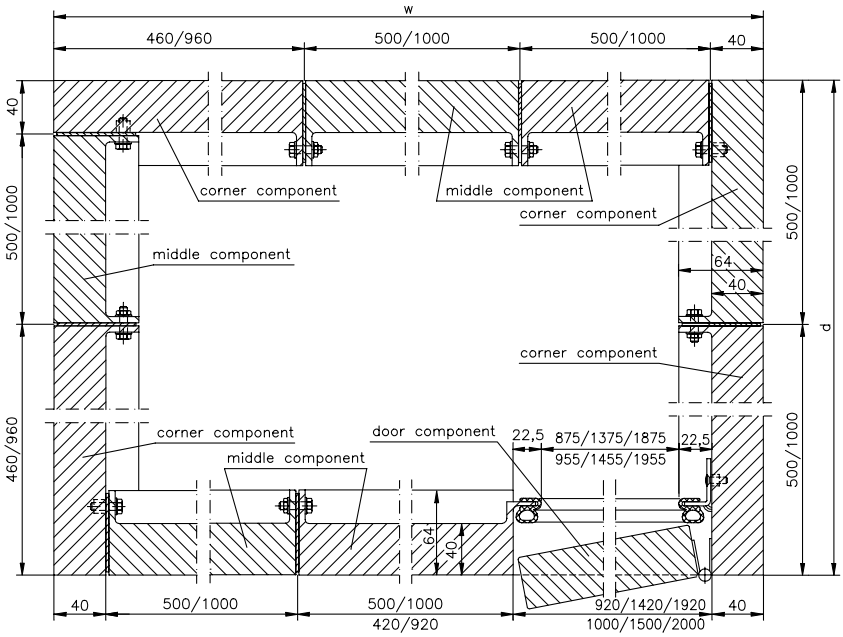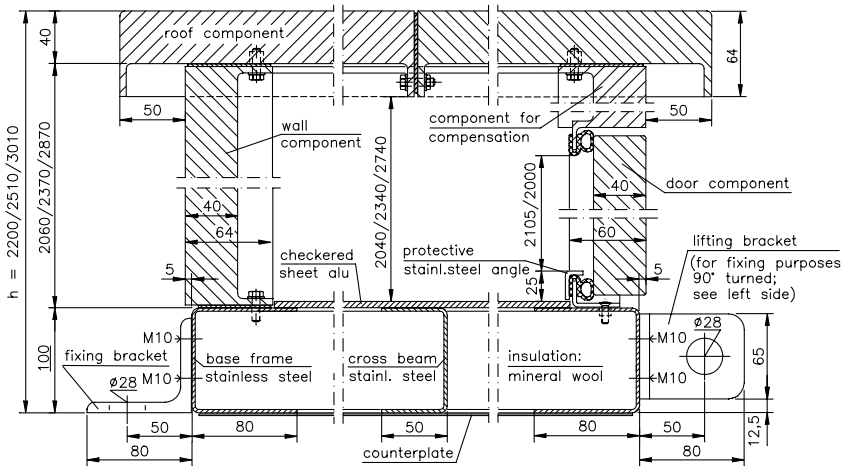
Special dimensions, special designs